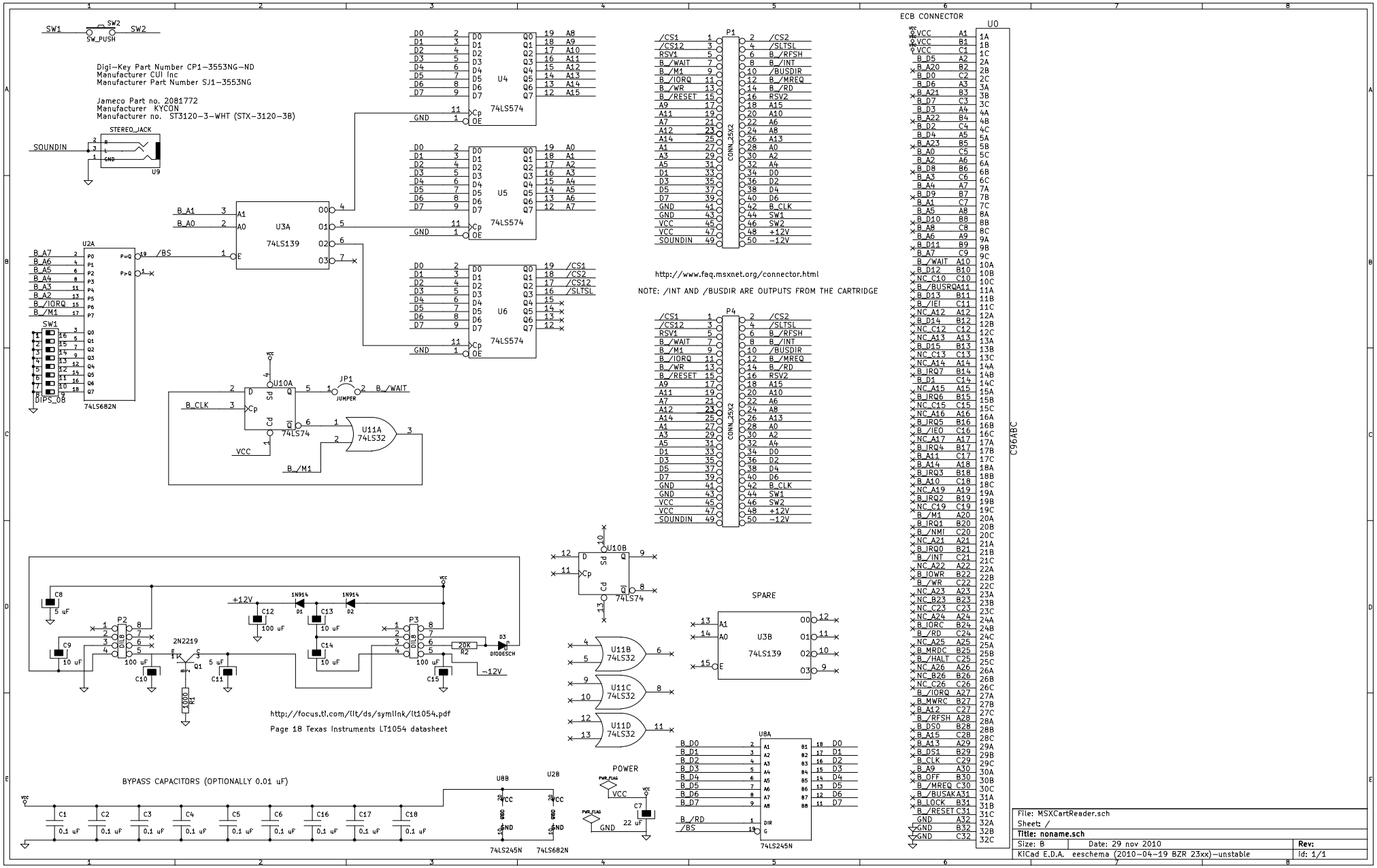
SW1
SW2
SW_PUSH
Digi-Key Part Number CP1-3553NG-ND
Manufacturer CUI Inc
Manufacturer Part Number SJ1-3553NG
Jameco Part no. 2081772
Manufacturer KYCON
Manufacturer no. ST3120-3-WHT (STX-3120-3B)
STEREO_JACK
SOUNDIN
U9
U4
U5
U6
74LS574
U3A
74LS139
U2A
74LS682N
DIPS_08
U10A
74LS74
JP1
JUMPER
B_/WAIT
U11A
74LS32
B_/M1
B_CLK
VCC
P1
P4
CONN_25X2
http://www.faq.msxnet.org/connector.html
NOTE: /INT AND /BUSDIR ARE OUTPUTS FROM THE CARTRIDGE
ECB CONNECTOR
U0
C96ABC
U10B
U11B
U11C
U11D
SPARE
U3B
U8A
74LS245N
2N2219
Q1
P2
P3
DIODESCH
-12V
+12V
http://focus.ti.com/lit/ds/symlink/lt1054.pdf
Page 18 Texas Instruments LT1054 datasheet
BYPASS CAPACITORS (OPTIONALLY 0.01 uF)
U8B
U2B
POWER
PWR_FLAG
GND
File: MSXCartReader.sch
Sheet: /
Title: noname.sch
Size: B
Date: 29 nov 2010
Rev:
KiCad E.D.A. eeschema (2010-04-19 BZR 23xx)-unstable
Id: 1/1